LF3-HL SERIES

Outdoor Lighting

WESTGATE
THE FUTURE IS HERE...AND IT'S QUITE BRIGHT!

LF3-HL-150W-30K-TR
LF3-HL-150W-40K-TR
LF3-HL-150W-50K-TR

Customer Name:

Project Name:

Note: | Type:

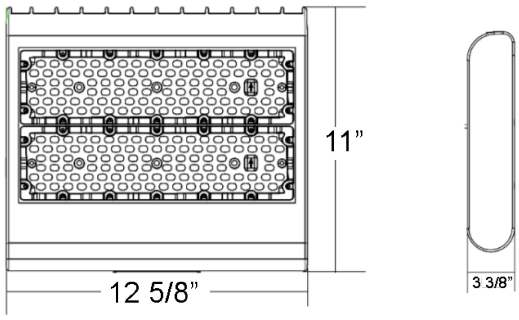

11”(H) x 12-5/8”(W) x 3-3/8”(D)

Ideal for general site lighting, alleys, loading docks, doorway, pathway, and parking areas.

Features

- DLC Premium & LED High-Lumen Floor lights
- Solid State Lighting Technology for Long Life
- No Maintenance Needed and High-Efficiency
- 70,000 Hours Rated Life
- 7-Year Warranty
- Lens: TYPE II, III and IV Optic Lens

Technical Specifications

Electrical:

- Voltage: 120~277VAC/50~60 Hz
- Wattage: 150W
- Power Factor: >0.9
- Efficacy: 131~137 LPW

Mechanical:

- With Snap-on & Bolt Mounting Options for One-Person Installations. Select a Mounting Option (Sold Separately)
- Die-cast Aluminum Housing with Powder Coat Finish (Dark Bronze)
- IP Rating: IP65
- Effective Projected Areas (EPA's) are:
  Front = 0.38 ft ², Side = 0.30 ft ², Face = 1.05 ft ²
- Operating Temperature: -40°F to 104°F
- Suitable for Wet Locations

Lighting:

- Dimming: 0~10V dimmable
- Optic Lens Type: III (Type II with “U” Bracket)
- LED: Lumileds Luxeon 3030 High Flux LED
- Cord Type: 6’ SJTW 18/3 AWG cable
- Total Lumens: 19700LM/ 20680LM
- Color Temperature: 3000K/ 4000K/ 5000K
- Color Rendering Index: ≥ 82
- Beam Angle:
  Type 2=120°X90° | Type 3=140° x80° | Type 4=140°x100°

Applications:

- Ideal for general site lighting, alleys, loading docks, doorway, pathway and parking areas.
- Replace existing HID flood lights/ wall packs

Other Models:

- 30W | 10400LM | LF3-HL-80W-30K-TR
- 40W | 10700LM | LF3-HL-80W-40K-TR
- 50W | 11200LM | LF3-HL-80W-50K-TR
- 30W | 13000LM | LF3-HL-100W-30K-TR
- 40W | 13200LM | LF3-HL-100W-40K-TR
- 50W | 13200LM | LF3-HL-100W-50K-TR
- 30W | 29600LM | LF3-HL-230W-30K-TR
- 40W | 30000LM | LF3-HL-230W-40K-TR
- 50W | 30000LM | LF3-HL-230W-50K-TR
- 30W | 37000LM | LF3-HL-300W-30K-TR
- 40W | 39000LM | LF3-HL-300W-40K-TR
- 50W | 39000LM | LF3-HL-300W-50K-TR

LISTED | DLC | WET LOCATION | IP65 | DIMMING

Phone: (877) 805-2252 | Fax: (877) 805-2252
www.westgatemfg.com | www.westgatecontrols.co

WG-Z4-ZB-2Z

Photometrics: LF3-HL-150W

TYPE III (TYPE II & TYPE IV see page 4)

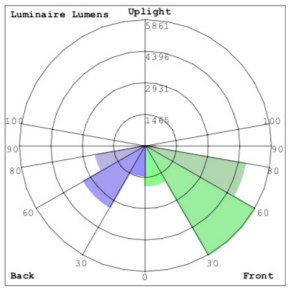

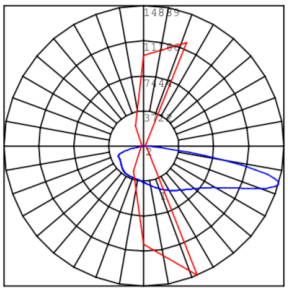

BUG Rating: B3-U0-G3

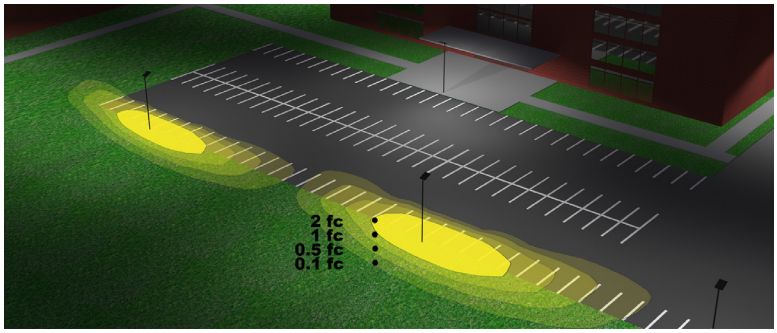

Area 90'x 185' Mounting Height: 20'

Other Views:

Front View

Side View

Back View

Performance Table: LF3-HL-150W

MODEL NO.	Wattage	Voltage	Lumens	Color Temp.	BUG Rating	LPW
LF3-HL-150W-30K-TR	150W	120~277V	19700LM	3000K	B3-U0-G3	131
LF3-HL-150W-40K-TR	150W	120~277V	20680LM	4000K	B3-U0-G3	137
LF3-HL-150W-50K-TR	150W	120~277V	20680LM	5000K	B3-U0-G3	137

Sample Ordering

Model		Wattage		Color Temp.		
LF3	-	HL	-	150W	-	[ ] - TR

30K = 3000K
40K = 4000K
50K = 5000K

Accessories Options

[ ]

Blank = No Option for Accessories
WEC-7RC =Remote Control for OPT-SEN-3MR-4
*REFER TO PAGE 3 FOR MOUNTING OPTIONS

Factory-Installed Options

[ ]

Blank = No Factory Installed Options
OPT-LF3-PCK = Twist Lock Photocell
OPT-SEN-3MR-3 = Programmable Microwave BI-Level
OPT-TLSOC7P = 7-Pin Receptacle Kit to accept Smart Control Twist-Lock Photocell (Photocell not incl.) (Shorting Cap incl.)
OPT-CLR-95 = Color Paint

Example:

1. **LF3-HL-150W-30K-TR** (For LF3 150W 3000K fixture 120V-277V)
2. **LF3-HL-150W-30K-TR** (For LF3 150W 3000K fixture 120V-277V)
   WEC-7RC (For Remote Control)
3. **LF3-HL-150W-30K-TR** (For LF3 150W 3000K fixture 120V-277V)
   WEC-7RC (For Remote Control)
   OPT-SEN-3MR-3 (For Programmable Microwave BI-Level Motion Sensor)

SENSOR AND REMOTE CONTROL OPTIONS

LF3-HL-PCK
Twist-Lock
Photocell + Receptacle Kit

OPT-SEN-3MR-3
Bi-Level Motion
Sensor

WEC-7RC
Remote control

OPT-TLSOC7P
Smart Control
7-Pin Receptacle Kit
(Photocell not incl.)
(Shorting Cap incl.)

Smart Control
7-Pin Receptacle Kit
for
OPT-TLSOC7P

WESTGATE

Phone: (877) 805-2252 | Fax: (877) 805-2252
www.westgatemfg.com | www.westgatecontrols.co

U BRACKET Dimension: LF3-HL-150W

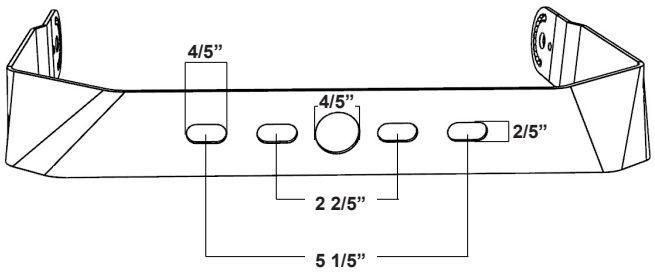

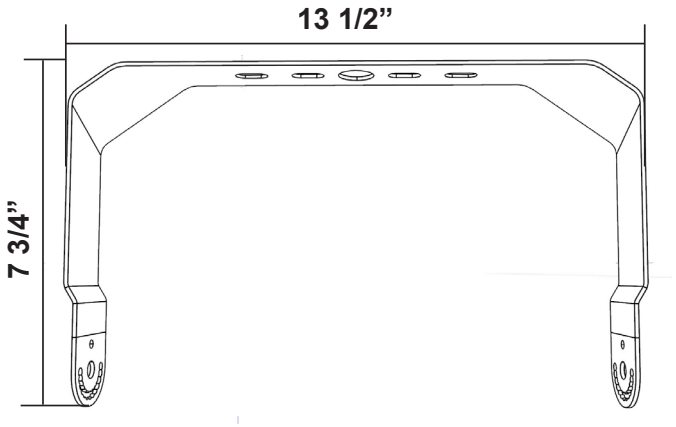

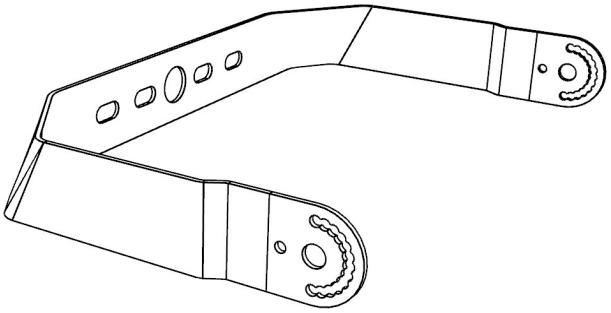

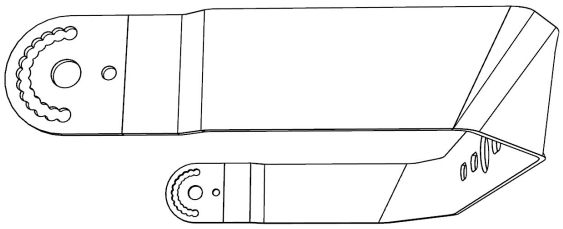

Shroud & Wire Guard: LF3-HL-150W

LF3-SH3

Shroud (Reversible)

LF3-SH3FG

Full Glare shroud

LF3-WG3

Wire Guard

Color Options: LF3-HL-150W

Custom color available

Black | Silver | White | Dark Bronze (Default color) | Green | Red | Yellow

WESTGATE

Phone: (877) 805-2252 | Fax: (877) 805-2252
www.westgatemfg.com | www.westgatecontrols.co

Lens Type Specifications:

- Optical PC Precision lenses designed for Westgate LF3 Series Flood Lights
- These lenses are replaceable by the factory or field replaced by installers

Lens Type Options:

LF3-HL-TYPEII-150W = TYPE 2 lens for LF3-HL series 150W (2/Order)
LF3-HL-TYPEIII-150W = TYPE 3 lens for LF3-HL series 150W (2/Order)
LF3-HL-TYPEIV-150W = TYPE 4 lens for LF3-HL series 150W (2/Order)

Lens Type Explained

SELECTING THE BEST DISTRIBUTION TYPE FOR YOUR OUTDOOR PROJECT

- "Distribution Type" defines how far forward of the luminaire (i.e., on the StreetSide) the effective output reaches

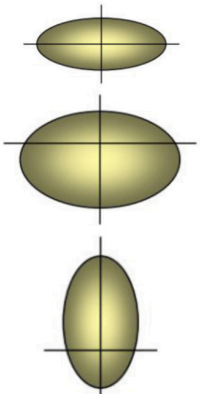

- Type 2 is still linear but wider in the front to accommodate 4 lane roadways or wider drive lanes
- Type 3 (commonly known as a "Bat-Wing") is suitable for perimeters, often where other interior pole placements fill the site
- Type 4 (commonly known as a "Forward Throw" or Asymmetric) Is best along perimeters where spill light is a concern or there are no place to add poles within a site

Photometrics: LF3-HL-150W

TYPE II

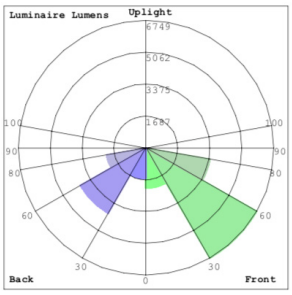

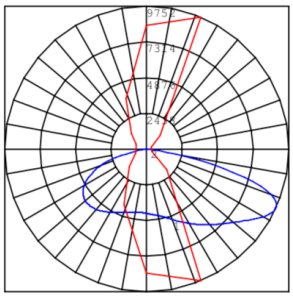

BUG Rating: B3-U0-G3

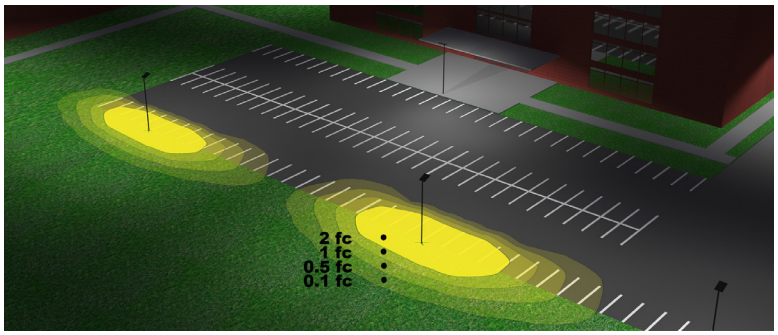

Area 80'x 160' Mounting Height: 20'

TYPE IV

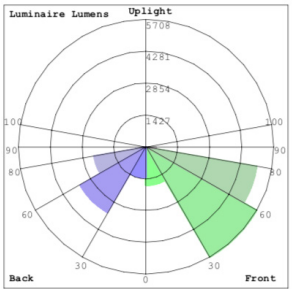

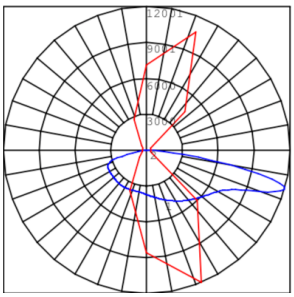

BUG Rating: B3-U0-G3

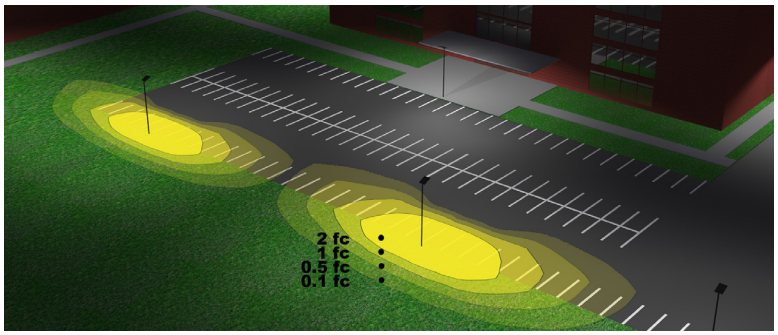

Area 95'x 175' Mounting Height: 20'

WESTGATE

Phone: (877) 805-2252 | Fax: (877) 805-2252
www.westgatemfg.com | www.westgatecontrols.co